SUBMITTAL DATA SHEET

AUX R32 - C-Series - AFEB24HP230V1C

Job Name _____ Location _____ Date _____

Purchaser _____ Engineer _____

For ☐ Reference ☐ Approval ☐ Construction

Submitted to _____ Schedule # _____

Unit Designation _____



AFEB24HP230V1C

- Micro Vent airflow
- 4D Wind
- Voice Control
- Auto Cleaning
- Wi-Fi Function
- High Air Flow Panel
- Easy Installation
- ECO Mode
- Heating down to -13°F
- R32 refrigerant

Single-Zone Wall Mounted System			
System			**AFEB24HP230V1C**
Indoor Unit			**AFEB24HP230V1CH**
Outdoor Unit			**AFEB24HP230V1CO**
AHRI Certified Reference No.			**214290023**
Cooling	Capacity (Rated)	Btu/h	23000*
	Capacity Range (Min–Max)	Btu/h	4300-28000
	Power Input (Rated)	W	1910
	Operating Range	°F	5-125
Heating	Capacity at 47°F (Rated)	Btu/h	24000*
	Capacity Range (Min–Max)	Btu/h	5300-30000
	Power Input at 47°F (Rated)	W	2010
	Capacity at 17°F (Rated)	Btu/h	22400*
	Capacity at 5°F (Max)	Btu/h	20800*
	Capacity at -5°F (Max) †	Btu/h	13200
	Operating Range	°F	-13-75
Efficiency	SEER2		22*
	HSPF2		10*
	EER2		12*
Indoor Unit	Air Flow Rate (SH/H/M/L/Q)	CFM	735/652/574/497/331
	Sound Pressure Level – Cooling	dB(A)	50/48/44/39/33
	Sound Pressure Level – Heating	dB(A)	49/47/43/38
	Package Dimensions (W×D×H)	inch	47.5×15.9×13.5
		mm	1207×403×342
	Net Dimensions (W×D×H)	inch	45.1×13.2×9.6
		mm	1145×335×245
	Net Weight	lbs [kg]	30.9 [14]

Specifications are subject to change without notice.

 © 2026 Aux Cloud Commerce (USA) Inc. All rights reserved

Single-Zone Wall Mounted System			
Outdoor Unit	Package Dimensions (W×D×H)	inch	40.0×16.7×30.0
		mm	1015×425×762
	Net Dimensions (W×D×H)	inch	38.6×15.3×27.6
		mm	980×388×700
	Net Weight	lbs [kg]	99.2 [45]
	Sound Pressure Level – Cooling	dB(A)	58
	Sound Pressure Level – Heating	dB(A)	58
Piping	Gas (O.D.)	in. [mm]	5/8 [15.88]
	Liquid (O.D.)	in. [mm]	1/4 [6.35]
	Indoor Drain	in. [mm]	5/8 [15.88]
	Min. Length	ft [m]	9 [2.74]
	Max. Length	ft [m]	100 [30]
	Max. Height	ft [m]	65 [20]
Electrical	Outdoor-Indoor	V, Ph, Hz	208/230,1,60
	Recommended Breaker Size	A	25
	MCA	A	16
	MOCP	A	25
Refrigerant	Refrigerant Type		R32
	Pre-Charge Amount	oz	44.1
	Additional Charge (over 25 ft)	oz/ft	0.258

Remarks:

1. All specifications are subject to change by the manufacturer without prior notice.
2. Ratings marked * are AHRI-certified (AHRI 210/240-2024) and match the AHRI Directory (ahridirectory.org) for the reference number(s) above as of October 2026.
3. Sound pressure levels are measured in anechoic chamber. During actual operation, sound pressure level will be higher as a result of room specification condition.
4. Data from AUX lab, 05/03/24. Data may change according to test surroundings; AUX reserves right of explanation on data.
5. † Capacity at -5°F is AUX lab data (maximum capacity), not an AHRI-certified rating.

 © 2026 Aux Cloud Commerce (USA) Inc. All rights reserved

Dimensions

Indoor Unit
AFEB24HP230V1CH

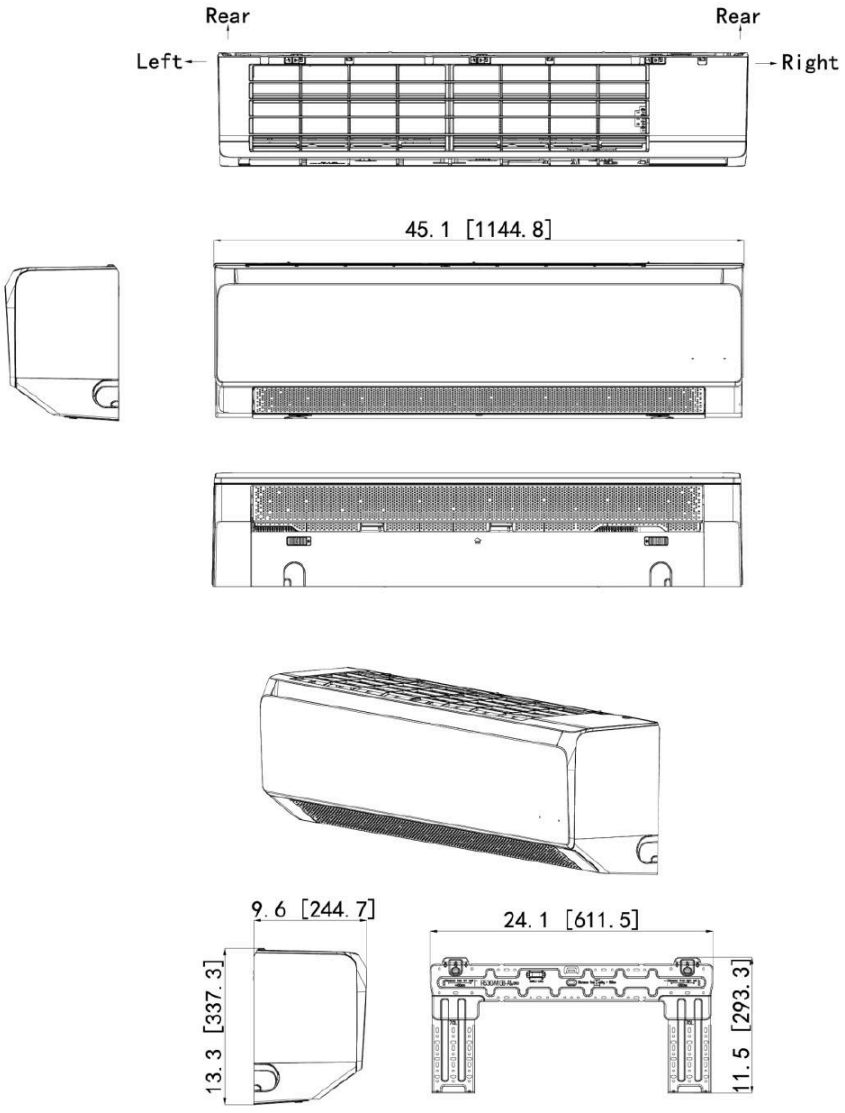

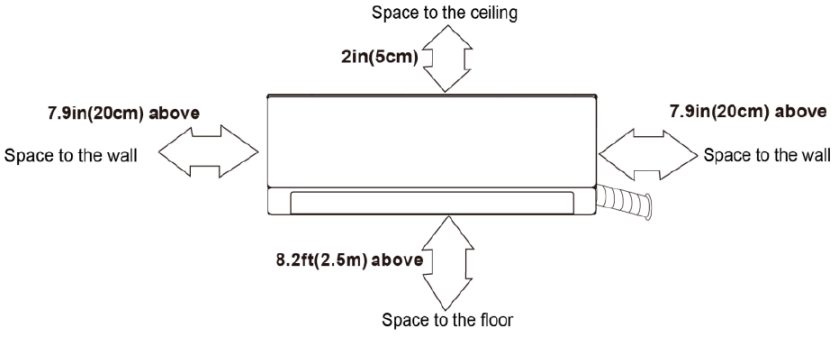

Specifications are subject to change without notice.
 © 2026 Aux Cloud Commerce (USA) Inc. All rights reserved

Dimensions

Outdoor Unit
AFEB24HP230V1CO

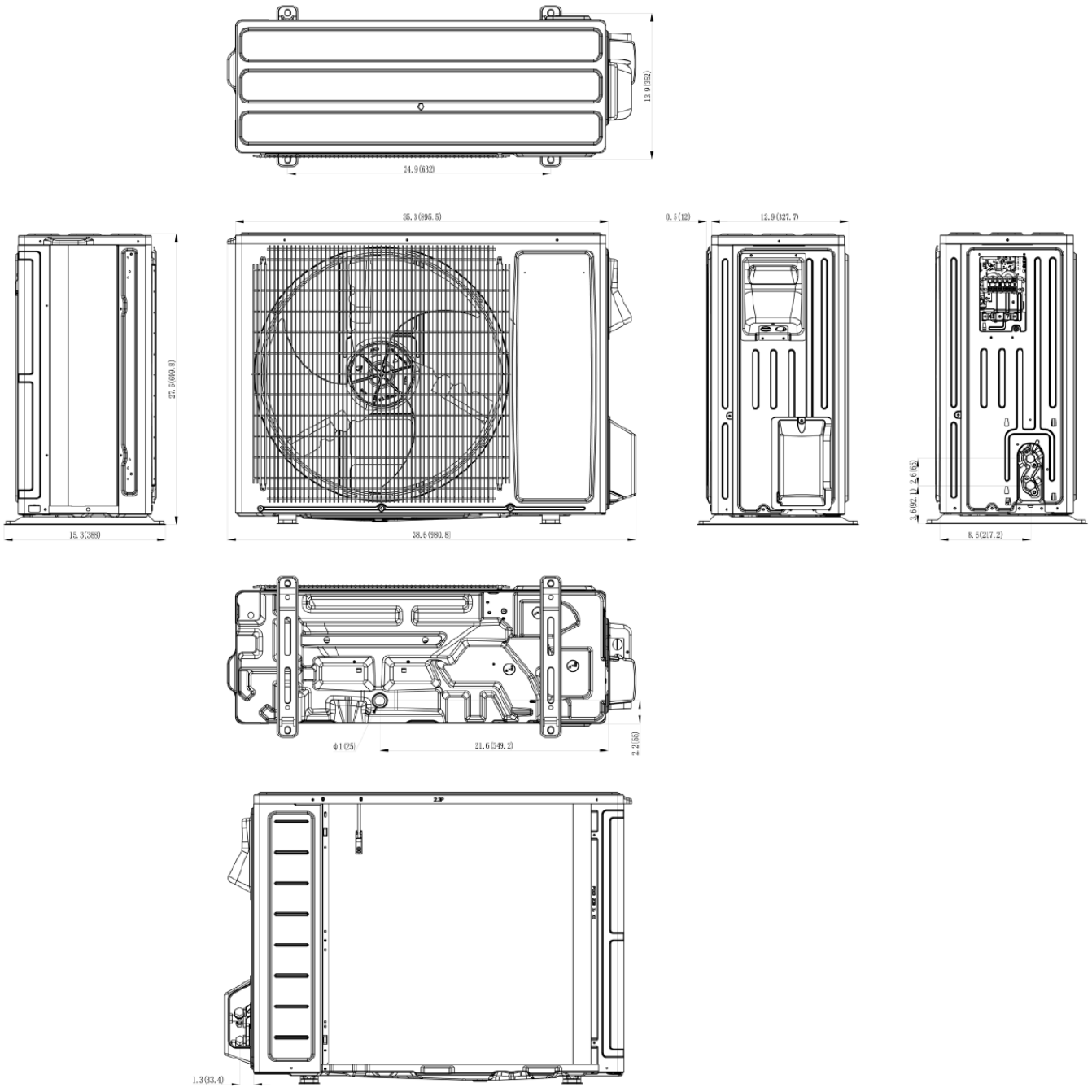

Specifications are subject to change without notice.
 © 2026 Aux Cloud Commerce (USA) Inc. All rights reserved

Clearances

Outdoor Unit
AFEB24HP230V1CO

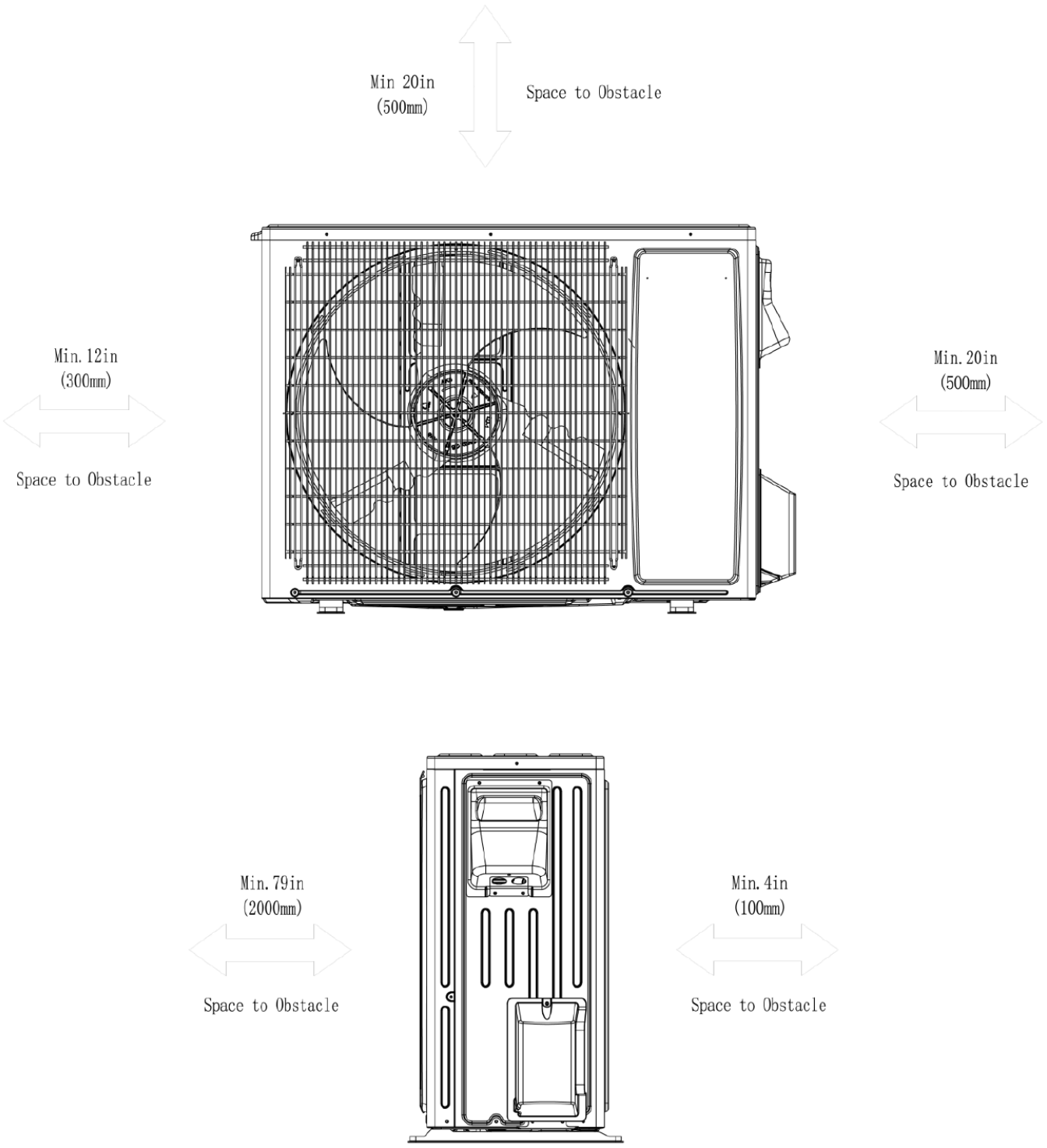

 © 2026 Aux Cloud Commerce (USA) Inc. All rights reserved